The AFHE Story

Imagine for a moment that a few short years ago you were the operator of a major Defense Department fuel handling and supply facility. You conducted daily operations that involved the transfer, storage, and accountability of all kinds of fuel such as jet fuels, aviation gasoline, automotive gasoline, heating oils, naval propulsion fuels, and lubricants. Your facility has up to fifty large tanks, many of which store millions of gallons of volatile fuels that must be handled in an environmentally safe and hazard free manner. Without any warning, you receive a frantic message that a tank has been overfilled and fuel has been discharged through an overflow pipe. By the time you are able to find the cause and correct the error, several hundred gallons have overflowed the protective basin into pristine wetlands. Your worst nightmare has just begun!

Thank goodness that times have changed! The prevention of this incident and many other kinds of accidents occurring is being dramatically improved by the efforts of the Defense Logistic Agency's (DLA) Defense Energy Support Center (DESC), headquartered at Fort Belvoir, VA. DESC's mission is to provide the Department of Defense and other customers comprehensive energy support in the most effective and economical manner possible. A major initiative to improve effectiveness of its facilities is to implement and standardize automated fuel-handling equipment at defense fuel storage and distribution activities. Specifically, the overall goal is to improve overall facility controls, improve inventory accountability, provide continuous monitoring, provide fail-safe engineering for all spill prevention and increase efficiency. Initially, DESC has targeted deep water, marine front terminals and bulk Defense Fuel Support Points (DFSPs). These facilities have high visibility and would have a significant and immediate impact on the environment should a fuel release occur. To implement these improvements and safeguards, DESC has tasked the Space and Warfare (SPAWAR) Systems Center, Charleston to execute the Automated Fuel Handling Equipment (AFHE) Program by providing planning, design, engineering, installation and project support to DESC. This effort is also in keeping with DESC's strong, long-standing relationship with the Military Services and industrial suppliers to work on mutually beneficial partnering efforts to improve fuel handling and storage.

As tasked and directed by DESC, the SPAWAR Systems Center, Charleston, (SSC Charleston) provides a Single Point of Contact (SPOC) for the AFHE Program and provides project management support to:

- Direct engineering planning and development
- Conduct site surveys
- Develop design drawings and installation details
- Perform acquisitions of services and supplies
- Perform installations
- Conduct system testing
- Provide training
- Coordinate project work
- Provide life-cycle management

SSC Charleston is a leading edge, network-centric US Navy corporation, that designs, builds, tests, fields, and supports many of the finest frontline command, control, communications, computers, intelligence, surveillance, and reconnaissance (C4ISR) systems in use today, or planned for the future. The engineering and technical staff along with a large group of leading edge industry personnel provides a highly skilled and talented work force to perform a full spectrum of engineering and installation support. SSC Charleston actively seeks and acquires special project work from the US Navy, other branches of the Department of Defense (DoD) and non-DoD Federal Agencies.

TYPICAL SITE

Figure 1 illustrates a typical AFHE site. Fuel storage and handling facilities vary based on location and mission and can be comprised of a few to all of the elements shown.

Operations and facilities at a typical site include:

- Above and below ground tank gauging and inventory control

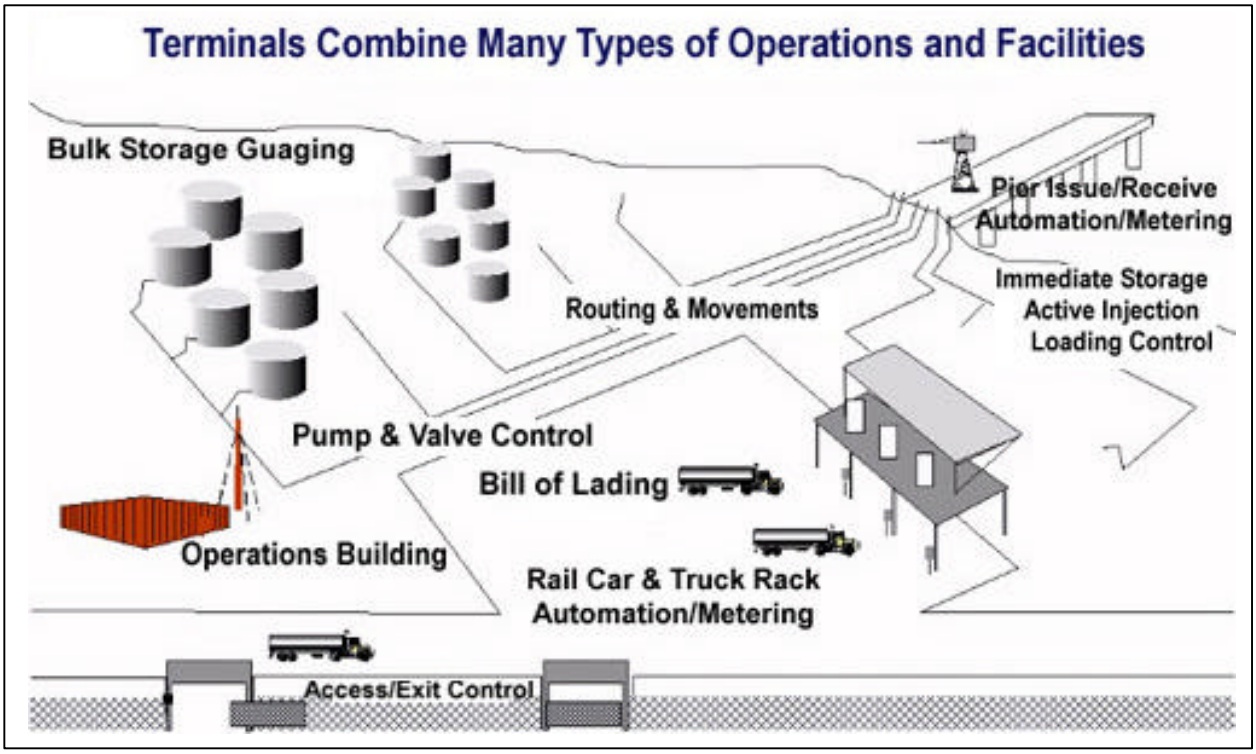

Figure 1 – Typical AFHE Site

- Manual and automated supervisory control of pumps, valves and other pipeline and manifold controls
- Automation of system line-ups for fuel evolutions
- Automation of product transfers on and off site
- Automation of truck loading racks and
- Automation of pier loading facilities
- Tracking of pipeline issues and receipts
- Continuous monitoring for leak detection
- Fail-safe controls for spill prevention
- Security control at site access points

DESC owns all DoD bulk petroleum products from point of purchase to point of sale. With a $3.5 billion annual budget, DESC procures nearly 110 million barrels of petroleum products each year. Federal and state requirements for leak detection are rapidly increasing and DESC recognizes its responsibility to protect the public and the environment. Therefore, it is no surprise that DESC is proactive in using technology such as AFHE as part of the environmental protection program.

ENGINEERING PLANNING

SSC Charleston has a proven track record of being able to leverage decades of experience and expertise to engineer new and diverse tasks such as the AFHE. The needs of the AFHE program are not that different from many of the centric based information technology systems with which SSC Charleston is intimately involved. Therefore, the engineering approach used for the AFHE support was already proven and known to yield project successes.

The AFHE engineering planning process does require several steps before a full definition of a fuel handling installation is known. To begin the process, DESC provides initial tasking to SSC Charleston to start design planning for a fuel handling and storage site. SSC Charleston conducts a preliminary site survey that defines existing equipment and fuel storage facilities including local conditions that may influence the design such as power distribution, topographic data, roads, bulk storage locations, pier facilities, operations location, rail car facilities, truck racks and exit/access control needs. A Site Planning Report is compiled to report the on-site conditions to be used as the basis for the

engineering design. Site documentation for existing wiring and piping systems is identified and collected for use by the designer. Using all of the above information and data, the SSC Charleston engineering team conducts an engineering survey to gain specific data needed to develop a conceptual version of the site specific AHFE system. A Project System Engineering Plan (PSEP), produced by the SSC Charleston engineering staff will detail all requirements such as overall system design, site peculiar details, equipment lists, system block diagrams and test requirements for equipment and system testing. The PSEP also provides the baseline budget and schedule for the overall project. The PSEP becomes the principal "working" document for DESC, the fuel handling site, SSC Charleston and the system designers. A series of meetings and design reviews are conducted with all interested parties working to agree on a final design concept. Trade-off considerations are discussed and agreed upon during this process to avoid last minute (and costly) design changes.

ENGINEERING DESIGN

Following the engineering planning and with an approved PSEP in hand, SSC Charleston begins the engineering design with a design site visit. The designers verify and update data previously collected. Duct availability and wire-runs are identified for inclusion in the installation drawings. Physical dimensions needed for piping modifications and valve replacements are noted. Tanks, piping, pump/motor configuration and valves are checked for instrumentation to ensure compatibility with controllers and other Supervisory Control and Data Acquisition (SCADA) equipment. With the platform configuration identified, the integration of system elements into the SCADA software configuration is accomplished. Installation design is concurrently developed resulting in system flow diagrams, electrical drawings, arrangement details, and piping and mechanical drawings including prefabrication details.

PRE-INSTALLATION TEST and CHECKOUT (PITCO)

The SCADA software for the AFHE System is a commercial–off-the-shelf (COTS) product and is configured by SSC Charleston to match the design for a specific AFHE site. Knowing the criticality of the SCADA application to a successful installation, SSC Charleston conducts a thorough test of the SCADA software as a PITCO. The control equipment is electrically connected in a dedicated AHFE Laboratory facility located at the SSC Charleston Engineering Center just as it would be connected at the fuel handling site. Samples of each field instrument, such as valve master stations, tank level probes, flow computers, etc. are connected during the testing. All other discrete and analog inputs are provided via a simulator panel. The software is configured with the control devices and tested using all possible combinations of normal and emergency operations. The system software is tested to approximated 85% to 90% of functional capability in this laboratory environment during a period of approximately three weeks. Total system testing is done on-site.

System documentation is assembled into user manuals containing all operational procedures, software data and instructions, specifications, drawings, wiring information, and maintenance requirements. These manuals are provided to the fuel handling and supply site along with "as-built" documentation at the conclusion of the installation. Formal operations manuals and training manuals are also developed for each site. These are provided to the site operators during systems testing to allow early familiarization with the documentation.

INSTALLATION AND TESTING

As the design process completes and material is staged to a site, a Pre-Installation Conference is held with personnel from DESC, the fuel handling site, SSC Charleston and the contractors involved with the design and installation. The installation planning is critical to the success of the AFHE program because the defense fuel-handling sites must remain fully operational during the installation. A phased approach is used to insure that the site will meet its operational commitments *without interruption*. SSC Charleston directs all aspects of the installation including piping, pump and valve installation and modification, system cabling and related electrical work, system instrumentation and system integration and training. The system, once installed, is stringently tested for adherence to installation criteria and system operability. DESC, SSC Charleston, and the fuel-handling site are totally integrated into the

government acceptance of the final installation and operability of the system. The AFHE system then becomes another important improvement in the operation and management of the fuel supply for the Defense Department.

LIFE CYCLE SUPPORT

Following the installation, SSC Charleston remains diligent. They continue to provide support to the site during a one-year warranty/reliability period via a 24hour/day-by 7 days/week trouble desk. Subsequent to the warranty period, maintenance support is grouped with other AFHE sites and continued on a 24 by 7 basis via a toll free trouble desk number with on-site support within 24 hours.

SSC Charleston also furnishes system life cycle support involving technical support for hardware and software operations, logistics support, configuration management and system enhancements and modifications.

Figure 2 – Tank Monitoring

AFHE SYSTEM DESCRIPTION

The AFHE system not only integrates the functions and capabilities required at a fuel handling and storage site but also enables the monitoring and automation of all motor operated valves (MOV). For example, by knowing valve positions, the AFHE system can alert operators if any valve setup is incorrect providing safety for operations and maintenance. Furthermore, with all of the instrumentation such as tank gauging, pressure sensors, fuel flow meters, and temperature gauging, the AFHE system is aware at all time that fuel is moving to and from tanks, to a customer and exactly how the fuel is being routed. The system will accurately track and record the volume of fuels being moved, an essential element for fuel accountability management and prevention of fuel spills. To illustrate the effectiveness of the system, fuel was recently being transferred from one large tank to another at an AFHE site when the system alerted the operator to a system imbalance indicating that less fuel was arriving than was being sent. An immediate action revealed a spill through an open manual, pressure relief valve that would have been an environmental disaster had it gone undetected. As it was, the spill was minimized and contained within acceptable boundaries.

The AFHE system supports the operational and fuel accountability management needs of fuel depots or terminals and is standardized to allow total system integration and improved logistics. Each AFHE system automatically stores data in a Site Management Database (SMD) which is designed to support and integrate existing and future firmware and software modules including accountability reporting, fuel quality management reporting, Preventive Maintenance System (PMS), Environmental Support, Engineering Applications, and to interface with the DESC's existing legacy accounting systems. Other descriptive features of the system are:

- Centralized operation for fuel inventory control, movement and management
- Supervisory Control and Data Acquisition (SCADA)
- Instrumentation, sensors and automated controls
- Tank monitoring
- Pump/motor monitoring
- Pipeline monitoring
- Pier operations
- Truck Rack Operations
- Safety controls for spill prevention
- Real time and historical database
- Report generation
- System access control
- Built-in-Testing (BIT)
- System status monitoring
- Site surveillance using Closed Circuit TV
- LAN/WAN/Other communication
- Remote diagnostics

Figure 2 shows a typical above ground fuel storage tank. A fully instrumented tank would provide the following features for the SCADA system:

- Continuous monitoring
- Product level
- Product temperature
- Level alarms
- Operator set alarm points
- Independent high level alarm
- Fill valve safety Interlock
- Pump control
- Leak detection

Figure 3 pictures a typical array of pipes used to distribute fuel throughout fuel handling and storage facilities. The AFHE system integrates

Figure 3 – Pipe Monitoring

pipelines into the SCADA by:

- Valve control
- Pressure monitoring
- Temperature monitoring
- Flow monitoring
- Metering

Figure 4 illustrates a typical pier operation. Pier operations are particularly sensitive because they are more prone to mechanical and human failures and the operations are in close proximity to natural rivers, bays and inlets. Any major spill could be an environmental disaster. Monitoring and control of pier operations are essential to minimizing any opportunity for spillage. The AFHE will:

- Provide metering for custody transfer
- Provide valve control

Figure 4 – Typical Pier Operations

- Monitor flow
- Provide evolution control
- Provide for emergency stop and isolation

Rail and Truck Rack Operations are integrated into the AFHE to provide the monitoring and control of all fuel handling. *Figure 5* is a picture of a typical truck rack operation. The AFHE will provide:

- Metering for custody transfer
- Valve control
- Flow control
- Evolution control
- Delivery tickets

Figure 5 – Truck Rack Operations

TYPICAL AFHE SYSTEM CONFIGURATION

A typical AFHE system configuration is based on the use of an open architecture, fully redundant control layout. Only COTS equipment that meets all current industry standards is used. The open architecture allows for flexibility in

expansion and connectivity to other third party systems and devices. The redundancy provides exceptional reliability to ensure that a failure of a single, high-level control device will not cause failure of a major portion of the system and adversely affect operations.

Figure 6 is a graphic of a typical AFHE system configuration. The AFHE network scheme is to provide three tiers each with redundancy and independence in the unlikely event of total system failure. Redundant UNIX or Windows NT operating systems are used for the AFHE Workstations and are networked to the administrative peripherals such as printers, alarm/event recorders, modems and other servers via an Ethernet LAN using TCP/IP protocol. The AFHE Workstations (Primary and Backup) are also networked to the AFHE Control Devices using Modbus Plus, a peer to peer, local area network system designed for industrial control applications. For redundancy, primary and secondary Modbus Plus networks are used. Modbus Plus provides the interface to the control devices such as the Programmable Logic Controllers (PLCs') and bridge MUX devices. From the these control devices, a Modbus network using serial communication standards RS232 and RS485, provide control and monitoring of elements such as the motor operated valve master stations, flow computers and remote I/O devices. This bottom tier Modbus is a Master to Slave network that directs the operation of motor operated valves and monitors values for parameters such as temperature, pressure, volume, flow, tank level and tank bottom sediment and water.

Figure 7 graphically describes a typical AFHE Operator's Control Console. This nerve center for the AFHE is designed to be user friendly yet sophisticated both in terms of design and technology. In addition to PC Monitoring, static terminal displays or video projection screens are used to provide an overview of the entire facility with appropriate alarms and messages to advise the operator of all operations.

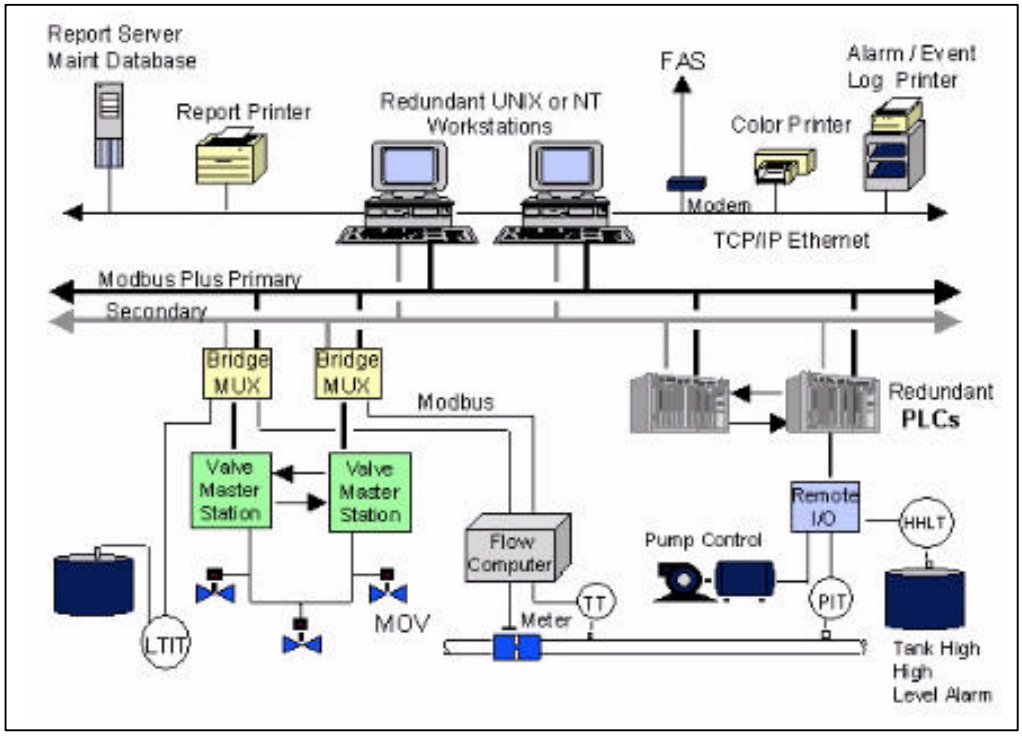

Figure 6 – Typical System Configuration

The network workstations allow the operator to view a hierarchical system of graphic displays that provide a colorful picture of operations. Charts, graphs and animated displays are available to show volume of flow, temperatures, tank levels, pumps on or off, valves opened or closed, set points for alarms, and active pipelines with flows and pressures. The 21-inch, workstation monitors can be split into as many as four window displays permitting the operator

to observe and control all aspects of fuel handling. "Drag and click" capability allows the operator to freely move from level to level of graphic and animated displays. Displays are logically crafted for ease of interpretation and usage. Tanks, pumps, and meters are grouped as INDEX Screens for quick access by the operator. "Double-click" action on any device will bring all data for the device into view. An Alarm Screen is available to the operator providing quick visual reference to any alarm condition. At the bottom of the workstation

- Single point control and monitoring of all site operations
- Multi-user capability utilizing X-Windows and /or remote terminal via LAN/WAN connectivity
- Use of computer graphical interfaces to display site conditions and on-going operations in real-time
- Provide warnings and alarms during static and dynamic site operations which allows for immediate detection and correction of possible problems

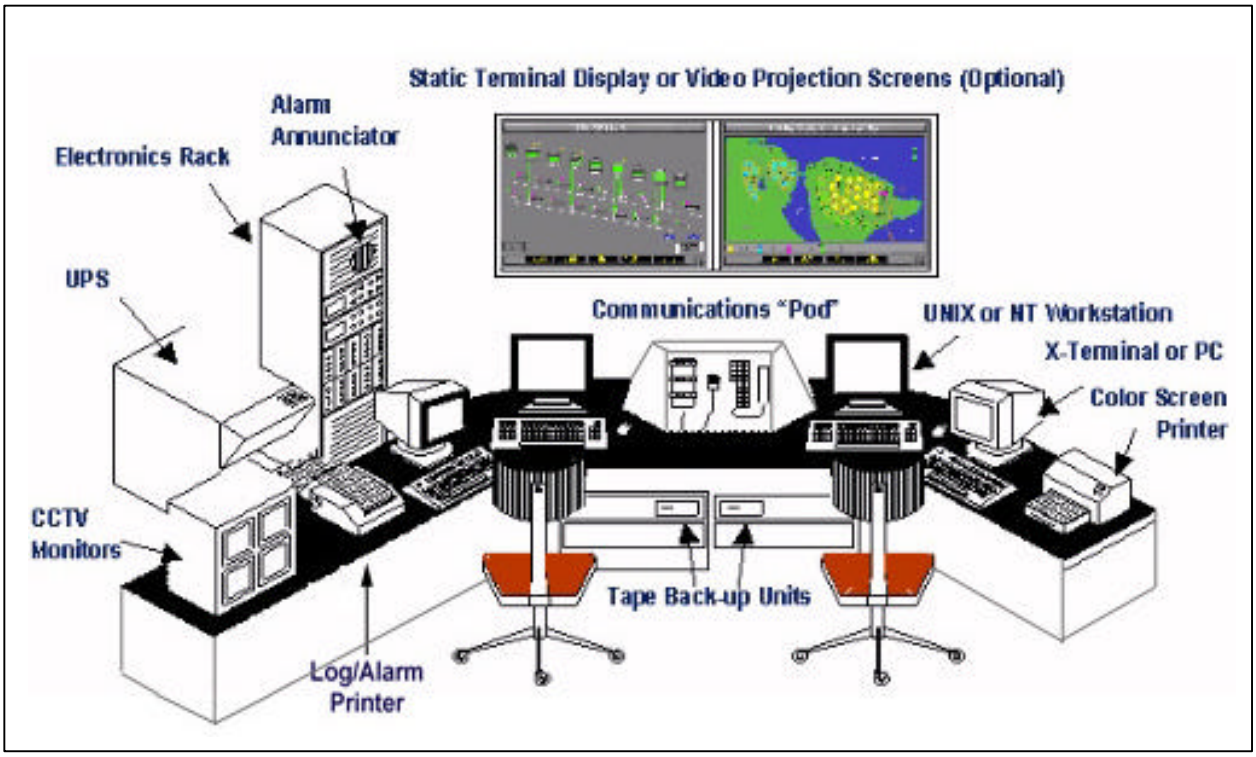

Figure 7 - Typical AFHE Operators Control Console

screen is an Alarm Icon that flashes to alert the operator if an alarm condition exists. The system maintains An Alarm Summary Log for record purposes. Also, any alarm is recorded in hardcopy on an event/alarm recorder.

In addition to a central location, workstations are also positioned at truck rack and pier operations sites to facilitate fuel handling at the point of operations. Closed Circuit TV monitors provide real time viewing of critical operational areas as well as monitoring access control into closed areas. In summary, the AFHE Operator's Control Console allows:

- Minimize on-site preparations by allowing set-up and control from a single point, thereby ensuring more positive control and increasing efficiency and accountability
- Provide early detection and prevention of fuel spills as defined by Environmental Protection Agency (EPA) regulations and The Oil Pollution Prevention Code of Federal Regulations, 40CFR112, via inventory monitoring, high level detection, dynamic mass balance and pressure alarming.

The heart of the AFHE is the SCADA software that runs the entire system. The SCADA

software provides the man machine interface for control of site operations. AFHE uses USData

A Configuration Control Board composed of personnel from SSC Charleston, DESC, and

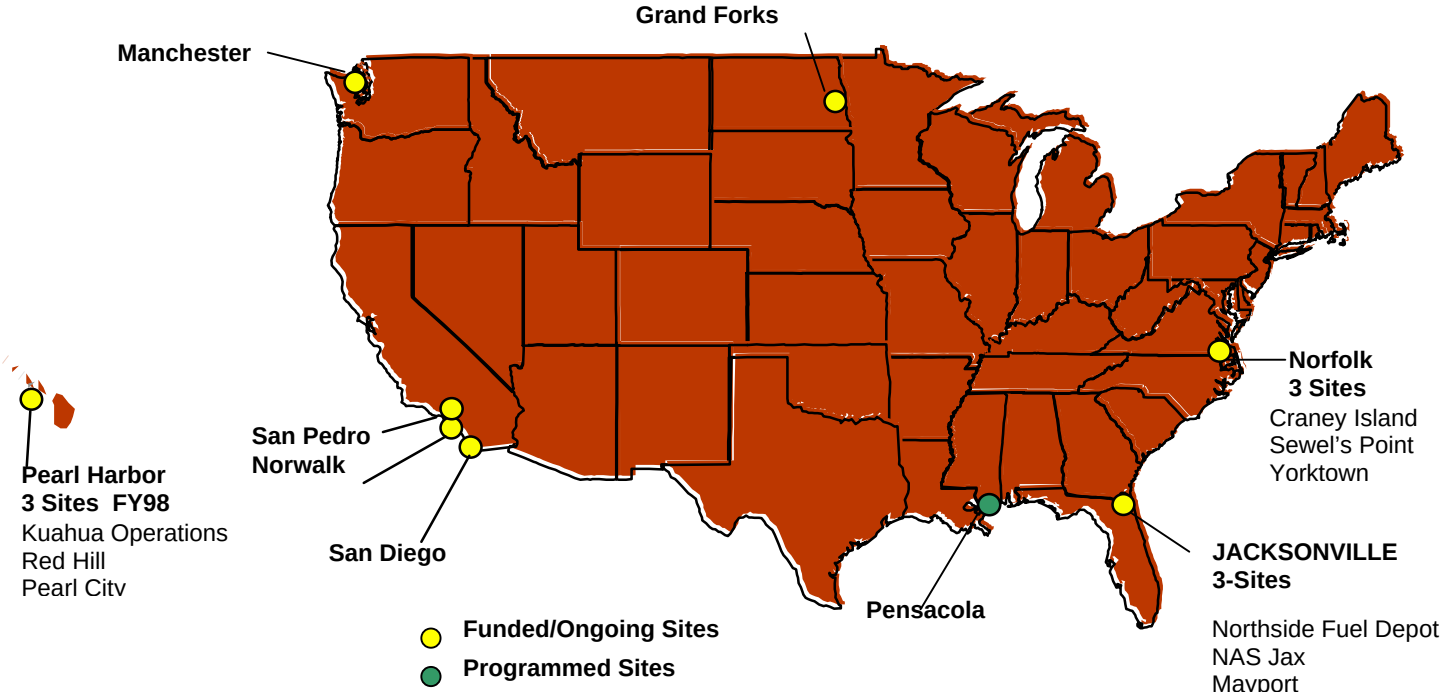

Figure 8 - AFHE SITE LOCATIONS

Factory®Link Enterprise Control System (ECS) as its SCADA software because of its ease of use, flexibility, power and commitment to an open architecture. This is critical due to the number of facilities to be automated and the wide array of equipment manufactures and communication interfaces. The AFHE SCADA system software provides access to all types of:

- Computer workstations
- Operating systems
- Databases
- Graphical user interfaces
- Networks
- Peripherals
- Programmable logic controllers
- Auto ID equipment
- Security systems
- Card reading equipment
- Other automation equipment

contractors are required to formally review and approve any changes to the SCADA configuration prior to issuance.

AFHE SITE LOCATIONS

The map shown as *Figure 8* indicates the current and planned AFHE sites. Sites that are complete and operational are Norfolk sites Sewell Pt and Norwalk and Grand Forks, ND, San Pedro, CA and Manchester, WA.

AFHE FUTURE AND ONGOING INITIATIVES

As a result of the success of the AFHE program, DESC has tasked SPAWAR with execution of it's Phase IIB fuel facility automation. This effort involves the design, procurement, and installation of Small Tank Technology (STT), Automatic Tank Gauging (ATG) and the

Automated Fuel Service Station (AFSS) equipment at all US Army, Navy and Marine Corps fuel facilities worldwide. This equipment provides for automated inventory monitoring, leak detection, and capture of point-of-sale transaction data for improved efficiency and accountability.

SSC Charleston is excited to be partnering with DESC and is proud to support DESC's vision "To be recognized as the best and most effective energy support organization in the world"